# Linked spreader ends V45/V55/V65

## Länkade spridarnockar V45/V55/V65

| V55 | | V65 | |
|---|---|---|---|
| Assy no | ③ | Assy no | ③ |
| - | - | 500-614-01 | 0 |
| - | - | 500-614-02 | 0 |
| - | - | 500-614-03 | 0 |
| - | - | 500-614-04 | 0 |
| 500-604-05 | 2x1 | 500-614-05 | 2x3 |
| 500-604-06 | 2x1 | 500-614-06 | 2x3 |
| 500-604-07 | 2x1 | 500-614-07 | 2x3 |
| 500-604-08 | 2x1 | 500-614-08 | 2x3 |
| 500-604-09 | 2x2 | 500-614-09 | 2x4 |
| 500-604-10 | 2x2 | 500-614-10 | 2x4 |
| 500-604-11 | 2x2 | - | - |
| 500-604-12 | 2x2 | - | - |

| ④ | ⑤ | ⑥ Alt. B | ⑦ | $V_U$ eye öga | $V_L$ fork gaffel | D |
|---|---|---|---|---|---|---|
| 1 | 55x6 | Ø 19 | M16 | Ø 16 | Ø 16 | Ø 12, Ø 14 (7/8”) |
| 1 | 50x5 | Ø 15 | M12 | Ø 16 | Ø 16 | Ø 10, Ø 12 (3/4”) |
| 1 | 50x5 | Ø 15 | M12 | Ø 14 1) | Ø 16 | Ø 10, Ø 12 (3/4”) |
| 1 | 50x4 | Ø 13 | M12 | Ø 14 1) | Ø 16 | Ø 8, Ø 10 (5/8”) |
| 1 | 50x5 | Ø 15 | M12 | Ø 14 | Ø 14 | Ø 10, Ø 12 (3/4”) |
| 1 | 50x5 | Ø 15 | M12 | Ø 14 | Ø 14 | Ø 8, Ø 10 (5/8”) |
| 2 | 50x5 | Ø 15 | M12 | Ø 12 | Ø 14 | Ø 8, Ø 10 (5/8”) |
| 2 | 50x4 | Ø 13 | M12 | Ø 12 | Ø 14 | Ø 7, Ø 8 (1/2”) |
| 0 | 50x5 | Ø 15 | M12 | Ø 12 | Ø 12 | Ø 8, Ø 10 (5/8”) |
| 0 | 50x4 | Ø 13 | M12 | Ø 12 | Ø 12 | Ø 7, Ø 8 (1/2”) |
| 4 | 50x4 | Ø 13 | M12 | Ø 10 | Ø 12 | Ø 7, Ø 8 (1/2”) |

*1) hole Ø 25.5 mm (red/röd)*

| V45 | | ④ | ⑤ | ⑥ Alt. A/B | ⑦ | $V_U$ eye öga | $V_L$ fork gaffel | D |
|---|---|---|---|---|---|---|---|---|
| Assy no | ③ | | | | | | | |
| 500-674-01 | 0 | 1 | 50x5 | Ø 15/B | M12 | Ø 14 | Ø 14 | Ø 10, Ø 12 (3/4”) |
| 500-674-02 | 0 | 1 | 50x5 | Ø 15/B | M12 | Ø 14 | Ø 14 | Ø 8, Ø 10 (5/8”) |
| 500-674-03 | 0 | 1 | 50x4 | Ø 13/B | M12 | Ø 12 | Ø 14 | Ø 7, Ø 8 (1/2”) |
| 500-674-05 | 2 | 1 | 50x4 | Ø 13/B | M12 | Ø 12 | Ø 12 | Ø 7, Ø 8 (1/2”) |
| 500-674-07 | 2 | 1 | 50x4 | Ø 13/A | 2) | Ø 10 | Ø 12 | Ø 7, Ø 8 (1/2”) |
| 500-674-08 | 2 | 1 | 50x4 | Ø 11/A | 2) | Ø 10 | Ø 12 | Ø 6, Ø 7 (7/16”) |
| 500-674-09 | 2 | 1 | 50x4 | Ø 13/A | 2) | Ø 10 | Ø 10 | Ø 7, Ø 8 (1/2”) |
| 500-674-10 | 2 | 1 | 50x4 | Ø 11/A<br>Ø 9.5/A | 2) | Ø 10 | Ø 10 | Ø 6, Ø 7 (7/16”)<br>Ø 5, Ø 6 (3/8”) |
| 500-674-12 | 4 | 2 | 50x2.5 | Ø 9.5/A<br>Ø 8/A | 2) | Ø 7 | Ø 8 | Ø 5, Ø 6 (3/8”)<br>Ø 4, Ø 5 (5/16) |
| 500-674-13 | 0 | 1 | 50x5 | Ø 15/B | M12 | Ø 12 | Ø 14 | Ø 8, Ø 10 (5/8”) |
| 500-674-14 | 2 | 1 | 50x5 | Ø 15/B | M12 | Ø 12 | Ø 12 | Ø 8, Ø 10 (5/8”) |
| 500-674-15 | 2 | 1 | 50x5 | Ø 15/B | M12 | Ø 10 | Ø 12 | Ø 8, Ø 10 (5/8”) |

*2) Use rigging screw pin. Använd vantskruvens riggnit.*

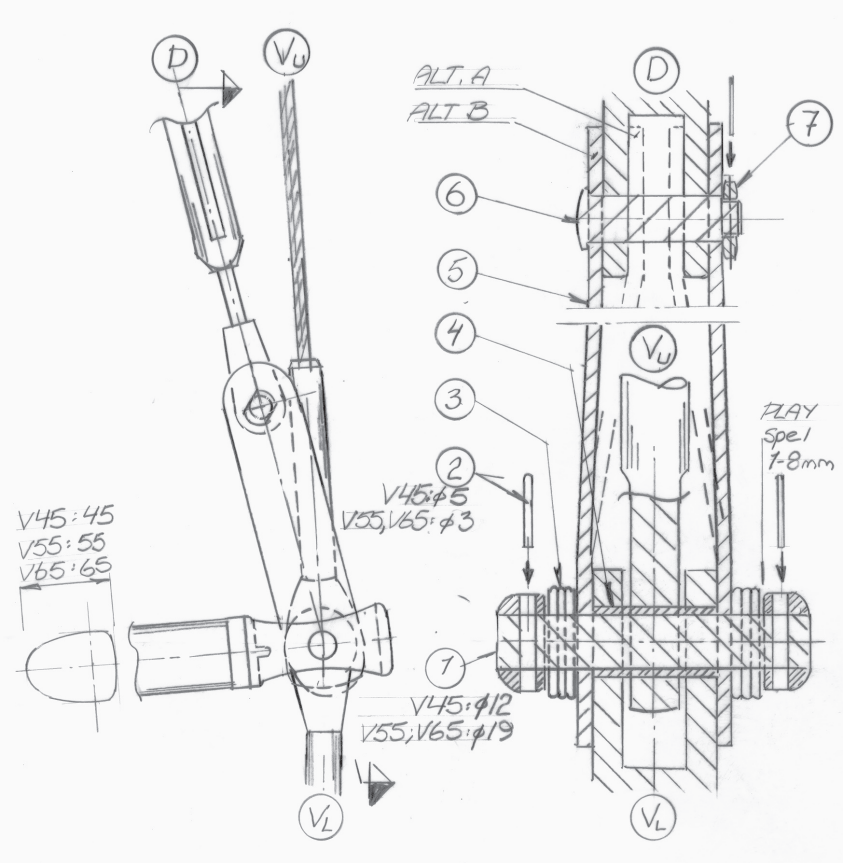


595-678-SE Printed in Sweden SELDÉN and FURLEX are registered trademarks of Seldén Mast AB

SELDÉN